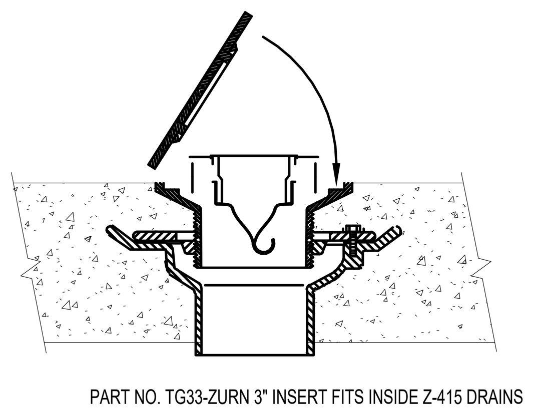

PART NO. TG33-ZURN 3" INSERT FITS INSIDE Z-415 DRAINS

IMPORTANT NOTES :

1. THIS TRAP GUARD INSERT CAN BE INSTALLED INTO ANY ZURN # 415 DRAIN TOPS TO PREVENT SEWER GAS EMISSION.
2. THE EXTRA WIDE FLANGE NEEDS TO HAVE AN ADHESIVE TYPE CAULK INSTALLED AROUND THE BOTTOM EDGE.
3. MOST Z415 TAILPIECES HAVE 4 PROTRUSIONS INSIDE THE 3-1/2" OPENING SO THE SEAL MUST BE MADE AROUND THE EDGE OF THE TG FLANGE. MAKE SURE INSIDE OF TAILPIECE IS CLEAN.

IF THE TRAP GUARD DEVICE SHOULD GET DAMAGED OR IMPAIRED IN ANY WAY, THE DEVICE CAN BE EASILY REMOVED BY USING A SHARP SCREW DRIVER UNDER THE FLANGE.

NOTE: CARE SHOULD BE TAKEN NOT TO TOUCH THE ELASTOMERIC FLEXIBLE MATERIAL WITH THE PRIMER.

NO FIRE RATINGS ARE
REQUIRED FOR UNDERGROUND
PIPING OR OPENINGS

6 TRAP GUARD INSERT DETAIL
NOT TO SCALE

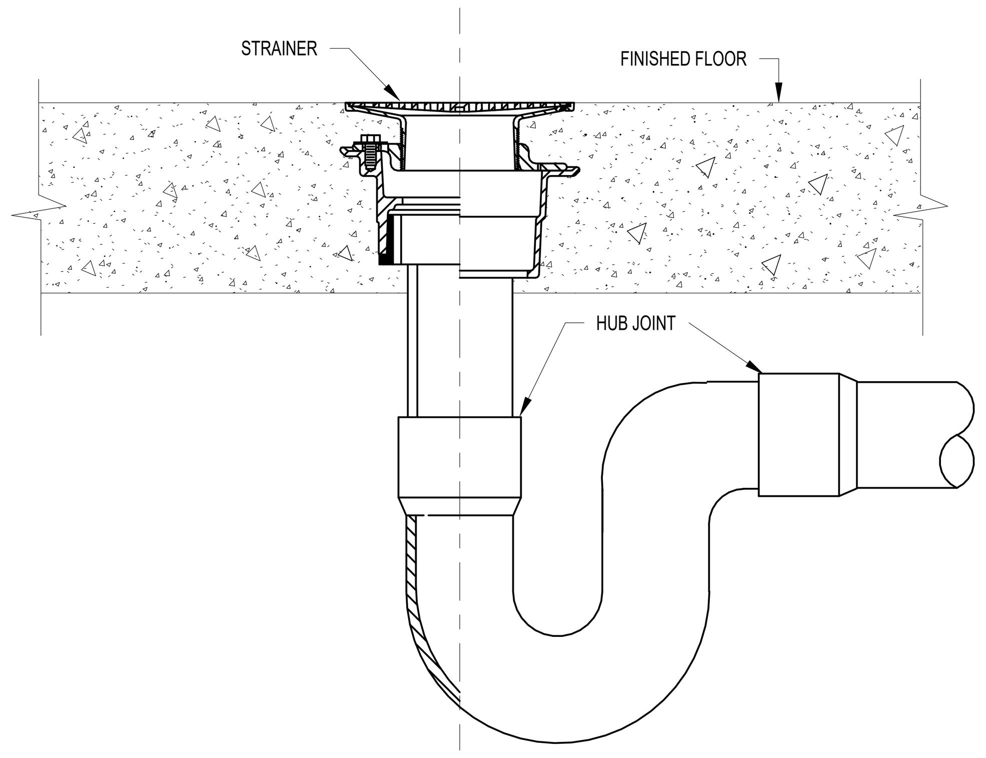

5 TYPICAL FLOOR DRAIN DETAIL
NOT TO SCALE

PLUMBING FIXTURE AND CONNECTION SCHEDULE

MARK	FIXTURE	ROUGH-IN CONNECTION SIZE C.W.	H.W.	VENT	WASTE	MANUFACTURER	MODEL	DESCRIPTION AND NOTES
L-1	LAVATORY (WALL HUNG)	1/2"	1/2"	1-1/2"	2"	AMERICAN STANDARD	LUCERNE 0355.012	WALL HUNG VITREOUS CHINA LAVATORY WITH CHICAGO FAUCET 420-E2805ABCP FAUCET, GRID DRAIN, CHROME PLATED P-TRAP WITH CLEANOUT AND ADA STOP & TRAP PROTECTORS AS REQUIRED, COORDINATE WITH ARCHITECT. INSTALL WITH WATTS #LFMMV, ASSE 1070 COMPLIANT THERMOSTATIC MIXING VALVE.
SK-2	SINK (DOUBLE COMPARTMENT)					ELKAY	CELEBRITY GECR3321	DOUBLE COMPARTMENT COUNTERTOP, STAINLESS STEEL SINK, ONE HOLE, WITH AMERICAN STANDARD 'COLONY PRO' #7074.100 PULL DOWN KITCHEN FAUCET. PROVIDE WITH TRU-BRO TRAP AND STOP PROTECTORS OR HANDI BASIN GUARD UNDERSINK ENCLOSURE AS REQUIRED, COORDINATE WITH ARCHITECT. PROVIDE WITH INSINKERATOR BADGER 1 GARBAGE DISPOSAL, MAX DEPTH 11-3/8"
WC-1	WATER CLOSET (ADA)	1-1/2"		2"	4"	AMERICAN STANDARD	CADET PRO 215AA.104	FLOOR MOUNTED, VITREOUS CHINA, TANK TOILET WITH ELONGATED BOWL W/ CHURCH #9500 OPEN FRONT SEAT. ADA HEIGHT.

A

PLUMBING PIPE MATERIALS

SYSTEM:	MATERIAL:
WATER PIPE, ABOVE GRADE	TYPE 'L' COPPER
WATER PIPE, BELOW GRADE	TYPE 'K' COPPER
SANITARY SEWER & VENT, ABOVE GRADE	CAST IRON NO HUB
SANITARY SEWER & VENT, BELOW GRADE	SCHEDULE 40 PVC
FIRE SPRINKLER LINE	BLACK STEEL
STORM, ABOVE GRADE	CAST IRON NO HUB
STORM, BELOW GRADE	SCHEDULE 40 PVC
NATURAL GAS	SCHEDULE 40 BLACK STEEL

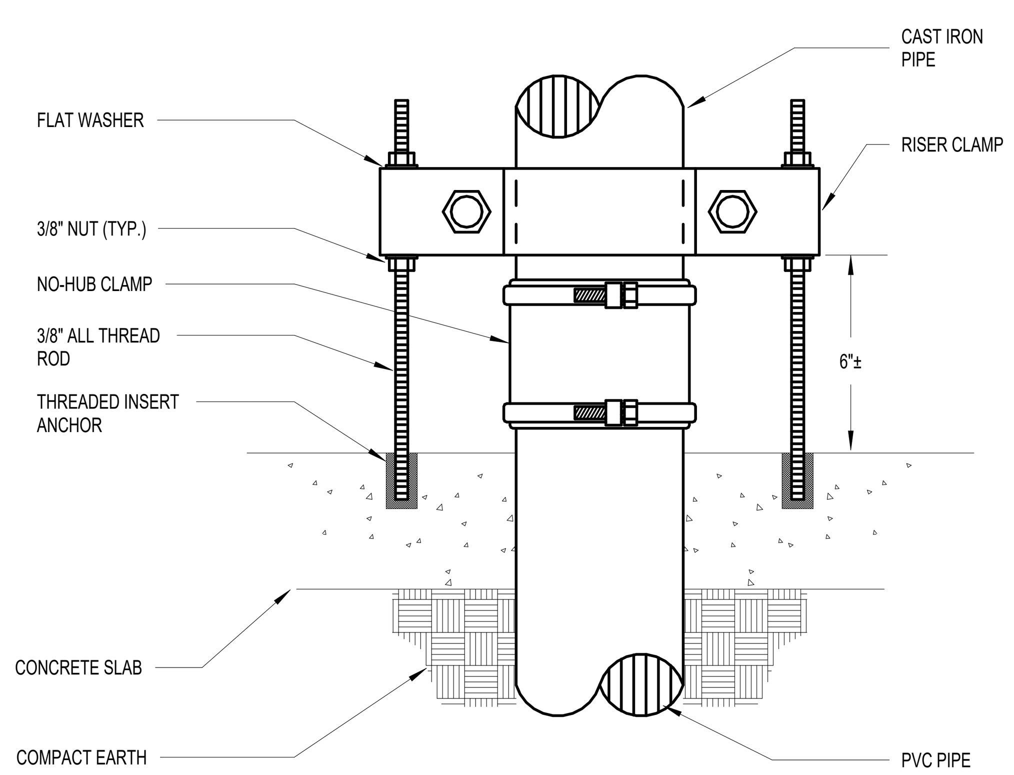

4 CAST IRON TO PVC TRANSITION DETAIL
NOT TO SCALE

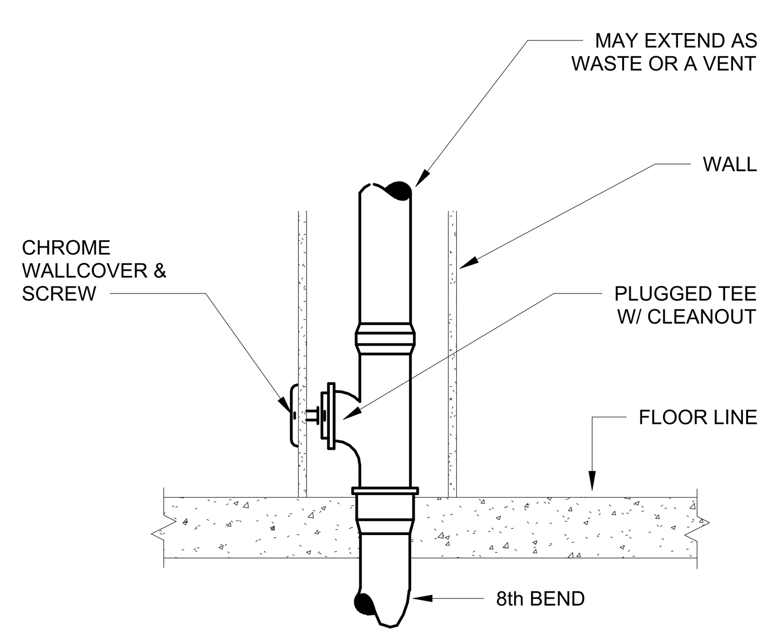

3 WALL CLEANOUT
NOT TO SCALE

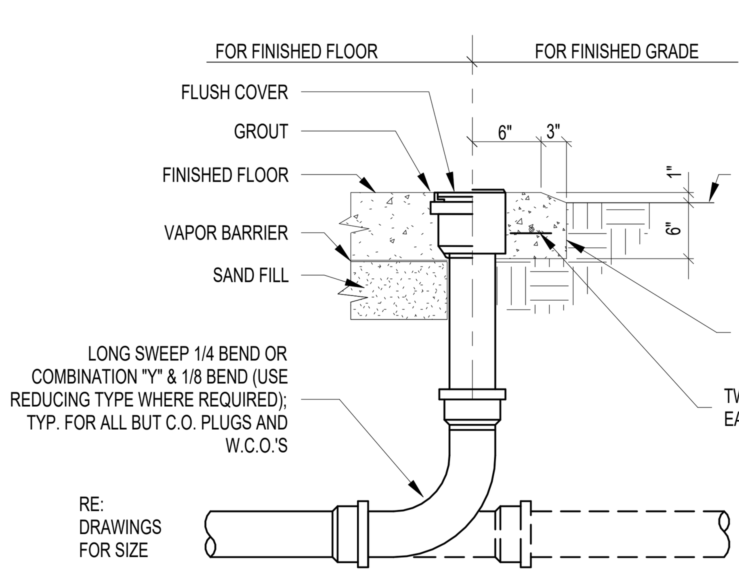

2 TYPICAL CLEANOUT DETAIL
NOT TO SCALE

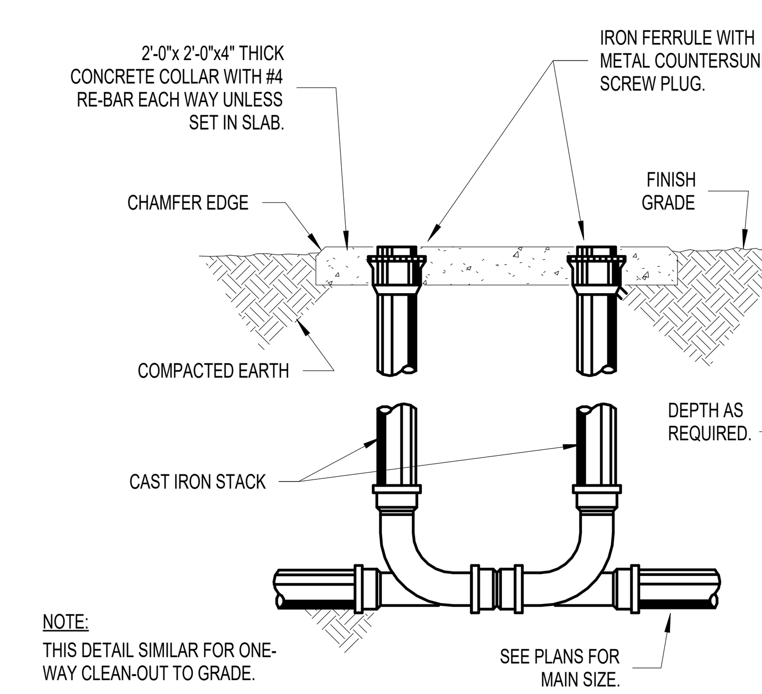

NOTE:
THIS DETAIL SIMILAR FOR ONE-WAY CLEAN-OUT TO GRADE.

1 2-WAY CLEANOUT DETAIL
NOT TO SCALE

N. CURTIS JONES, JR.
58428
REGISTERED PROFESSIONAL ENGINEER
STATE OF TEXAS

JE#5130
02/24/2026

THE SEAL APPEARING ON THIS DOCUMENT WAS AUTHORIZED BY N. CURTIS JONES. JR. P.E. 58428

JONES ENGINEERS, L.P.
Consulting Mechanical/Electrical/Plumbing Engineers
9820 Whithorn Dr. Houston, Texas 77095 (713)222-7766
Texas Registered Engineering Firm #F-3811

SLI GROUP, INC.
ARCHITECTURE | DESIGN | CONSTRUCTION
15810 PARK TEN PLACE, SUITE 300
HOUSTON, TEXAS 77084
713-465-4650
www.sligroup.com

© COPYRIGHT

PROSPERITY BANK - REMODEL
2424 MARKET STREET
GALVESTON, TEXAS 77550

Project Number : Project Number

	DATE
ISSUED FOR CLIENT APPROVAL	
ISSUED FOR BIDDING	
ISSUED FOR PERMIT	
ISSUED FOR CONSTRUCTION	

REVISIONS

MARK	DESCRIPTION	DATE
A	Addendum A	03/06/26

The information, ideas, designs, details, layouts, techniques, features, arrangements, plans, sequences, dimensions, allowances, tolerances, conceptions, specifications, intentions, technology or embodiments, as illustrated, arranged, displayed, noted, recorded, indicated, represented, disclosed, evidenced, detailed or otherwise reduced to tangible form hereon, either expressly, inherently or by implication, are the confidential and proprietary information of SLI Design, Inc., and shall not be used for any purpose other than the specific project or undertaking identified on the drawing title block or legend for which they are and have been prepared by SLI Design, Inc. Any other reproduction, disclosure or use of any portion of the confidential and proprietary information of SLI Design, Inc., shall be a breach of the obligation of confidence created by the acceptance of this drawing from SLI Design, Inc. for a specific project or Contract. Any copying, duplicating, reproducing, utilization, alteration, modification, revision or change to this drawing, is expressly prohibited unless done with the prior written consent or approval of SLI Design, Inc., and shall not be undertaken without receipt of such prior written approval. This drawing is loaned by SLI Design, Inc., for the limited purpose of complying with a specific Contract. The drawing remains the property of SLI Design, Inc., and shall be returned upon request or completion of the contract, unless specifically authorized by Contract, under which it was loaned.

PRINT DATE: 3/6/2026 10:21:28 AM

DRAWING TITLE
PLUMBING SCHEDULES & DETAILS

DRAWN BY	JE	SHEET NO.
CHECKED BY	JE	P3.02
APPROVED BY	JE	

C:\Users\patrick.thompson\AppData\Local\Autodesk\Revit\Autodesk Revit 2026\CollaborationCache\L73JV6YYKMUNLKGY\a8020173-a4a3-46ac-b8e6-3e6484585049\7b921123-d574-4d48-b4bc-dc312a7e5761.rvt